PRODUCT DATA SHEET

Burlington®

PRODUCT CODE

SN1000FSLT

RANGE

Strand

DESCRIPTION

Strand Basin Unit Floorstanding 1000mm Light Taupe

CATEGORY	Furniture
WARRANTY DETAILS	10 Years
COLOUR	Light Taupe
FINISH APPLICATION	Lacquered
PRIMARY MATERIAL	MDF
SECONDARY MATERIAL	Wood
INSTALL TYPE	Floor Standing
PRODUCT WIDTH MM	970
PRODUCT HEIGHT MM	822
PRODUCT LENGTH MM	446
PRODUCT NET WEIGHT KG	46

STANDARDS	EN14749:2016
COLOUR CODE / REFERENCE	NCS S 1502-Y20R
DRAWER BOX	MFC
DRAWER RUNNERS	DTC / SS10C350H1
DRAWER EXTENSION	Full extension
DRAWER ADJUSTMENT	2 way adjustment
WALL HANGERS	No
ADJUSTABLE FEET	No
DRAWER CAPACITY	15 kgs
DRAWER OPERATION	Soft close

Burlington®

TECHNICAL DIMENSIONS

Dimensions in mm unless otherwise specified.

Tolerances (per material type) apply.

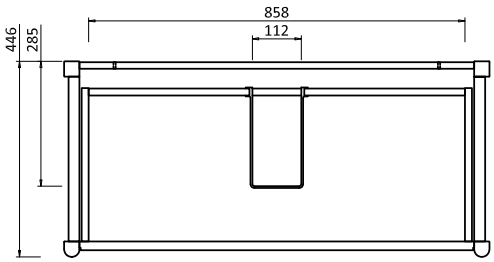

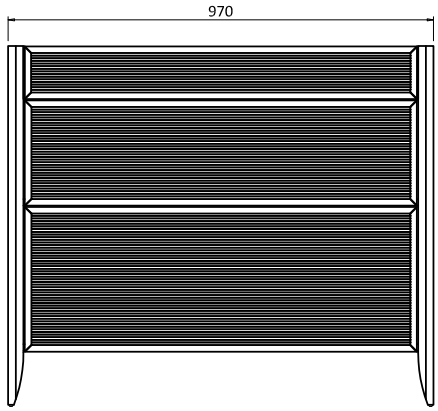

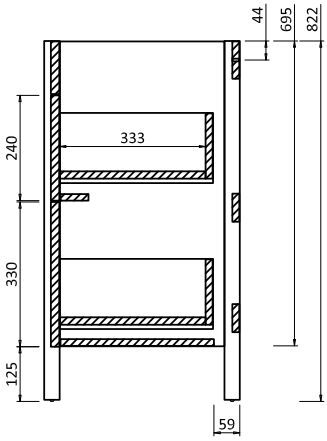

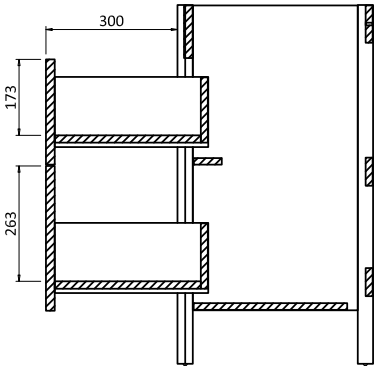

Burlington®

SPARES LIST

Only the parts labelled are available as spares.

NUMBER	PART CODE	DESCRIPTION
1	SP2105	Drawer runner for Strand Floorstanding Basin Unit (one pair)
2	SP2128	Top drawer front for Strand Floorstanding Basin Unit 1000mm Matt White
	SP2116	Top drawer front for Strand Floorstanding Basin Unit 1000mm Light Oak
	SP2122	Top drawer front for Strand Floorstanding Basin Unit 1000mm Spruce Green
	SP2110	Top drawer front for Strand Floorstanding Basin Unit 1000mm Light Taupe
3	SP2129	Bottom drawer front for Strand Floorstanding Basin Unit 1000mm Matt White
	SP2117	Bottom drawer front for Strand Floorstanding Basin Unit 1000mm Light Oak
	SP2123	Bottom drawer front for Strand Floorstanding Basin Unit 1000mm Spruce Green
	SP2111	Bottom drawer front for Strand Floorstanding Basin Unit 1000mm Light Taupe